The purpose of this Standard Drawing is to provide typical standard details that shall be used within the limitations specified in the drawing and in accordance with the following:

1. The adaptability of the standard details shall be assessed by the project designer in respect of specific project geometric, appropriate foundation and scour conditions.
2. If the insitu bearing capacity is inadequate, insitu ground improvement may be explored subject to review and acceptance by E&T Structures and Geotechnical sections.
3. When there is uncertainty regarding the application of the standard details on this drawing for a specific project, advice shall be sought from E&T Structures.
4. The details specific to the project shall be shown on the project specific drawings.

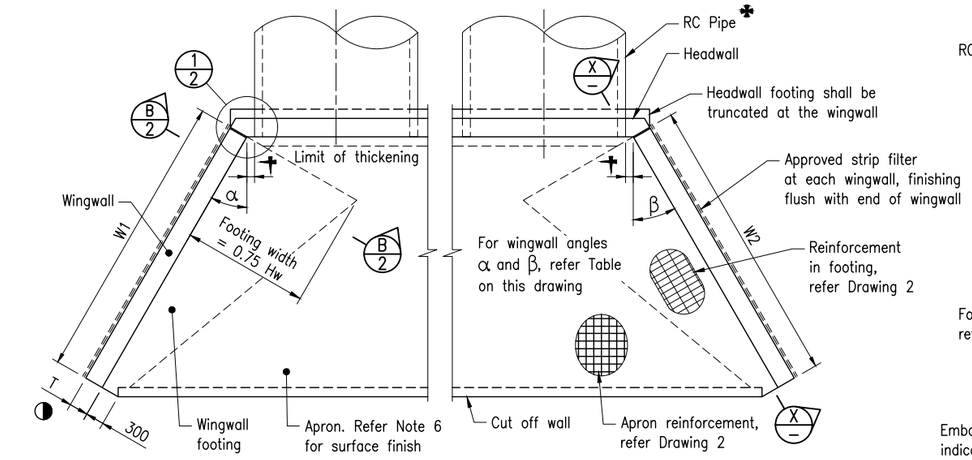

PLAN

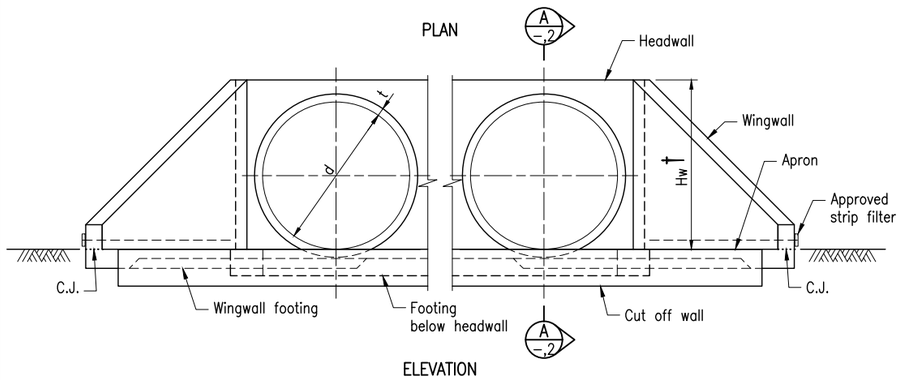

ELEVATION

MULTIPLE CELL CULVERT

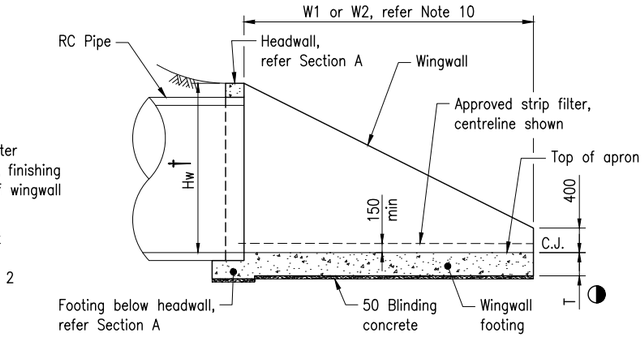

SECTION X – ELEVATION AT WINGWALL – CONCRETE DETAILS

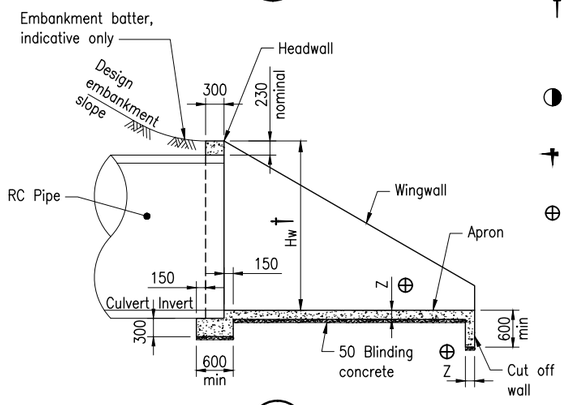

SECTION A – HEADWALL AND APRON – CONCRETE DETAILS

† Hw = Internal pipe diameter (d) + pipe thickness (t) + 230 min. Refer table on Drawing 2

◑ T is a constant thickness for wingwalls and footings. Refer table on Drawing 2

✝ Exposure classification B2 = 100
Exposure classification C1 and C2 = 125

⊕ Z is a constant thickness for aprons and cut off walls. Refer table on Drawing 2

NOTES:

1. PIPE CULVERT END STRUCTURES shall be in accordance with MRTS03.
   The purpose of this drawing is to provide typical details for wingwalls, headwall and apron for culverts with pipe diameter 750 to 2400.
   Refer Standard Drawing 1305 for typical details of headwall and apron for culverts with pipe diameter 375 to 675.
   Refer Standard Drawing 1359 for details of culvert installation and earthworks.
   This standard drawing does not provide details of fish passage requirements. Where project specific environmental assessment determines that waterway barrier works are required, additional details shall be developed and included in the project drawings.
2. Maximum design pressure (E_d) under the culvert apron is 75 kPa.
3. PIPE DIAMETERS greater than 2400 require a special design.
4. Where CULVERT APRONS are longer than 20m, the project specific design shall be developed with a transverse contraction joint, with direction of flow, at every 20m length. Typical contraction joint details provided in this standard drawing are to be used.
5. WINGWALLS for skewed culverts with angle greater than 45 require a special design.
6. CONCRETE shall be in accordance with MRTS70.
   Design life 100 years.
   Exposure classification and cover to reinforcement shall be in accordance with AS 5100. Minimum concrete strength and cover to reinforcement shall be as shown in table below.

Exposure classification	minimum B2	C1	C2
Minimum concrete strength	S40/20	S50/20	S55/20
Minimum Cover UNO	60	70	80

   Blinding concrete N20/20.
   Surface roughening of the aprons shall be broom finish using a broom not less than 400 wide to achieve an average texture depth of 0.8. The direction of brushing shall be perpendicular to the direction of flow.
7. REINFORCING STEEL shall be read in conjunction with Standard Drawings 1043 and 1044, and shall be in accordance with MRTS71 and AS/NZS 4671.
   Deformed bars Grade D500N. Round bars Grade R250N. Mesh Grade D500L.
   Reinforcement shall be hot dip galvanised to AS/NZS 4680 where shown.
8. TACK WELDING to reinforcement for location purposes to AS/NZS 1554.3.
   Welding consumables to be controlled hydrogen type: G49X to AS/NZS ISO 14341–B or T49X to AS/NZS ISO 17632–B.
9. WINGWALL DRAINAGE shall be provided behind wingwalls to prevent hydrostatic pressure being applied to the wingwall. A strip filter shall be used at each wingwall to drain out at the low end of the wingwall as shown.
10. PROJECT–SPECIFIC INFORMATION to be shown on the drawings:
    Exposure classification; Culvert chainage; Skew angle; Apron setout and extents; Headwall and wingwall extents (W1, W2, α, β); Requirements for fish passage.
11. DIMENSIONS are in millimetres.

ASSOCIATED DEPARTMENTAL DOCUMENTS:

Design Criteria for Bridges and Other Structures; Road Drainage Manual (RDM)

REFERENCED DOCUMENTS:

Departmental Standard Drawings:

1043 Reinforcing Steel – Standard Bar Shapes
1044 Reinforcing Steel – Lap Lengths
1305 Pipe Culverts – Headwall and Apron for Pipe Diameter 375 to 675
1359 Culverts – Installation, Bedding and Filling/Backfilling Against/Over Culverts

Departmental Specifications:

MRTS03 Drainage, Retaining Structures and Protective Treatments
MRTS70 Concrete; MRTS71 Reinforcing Steel

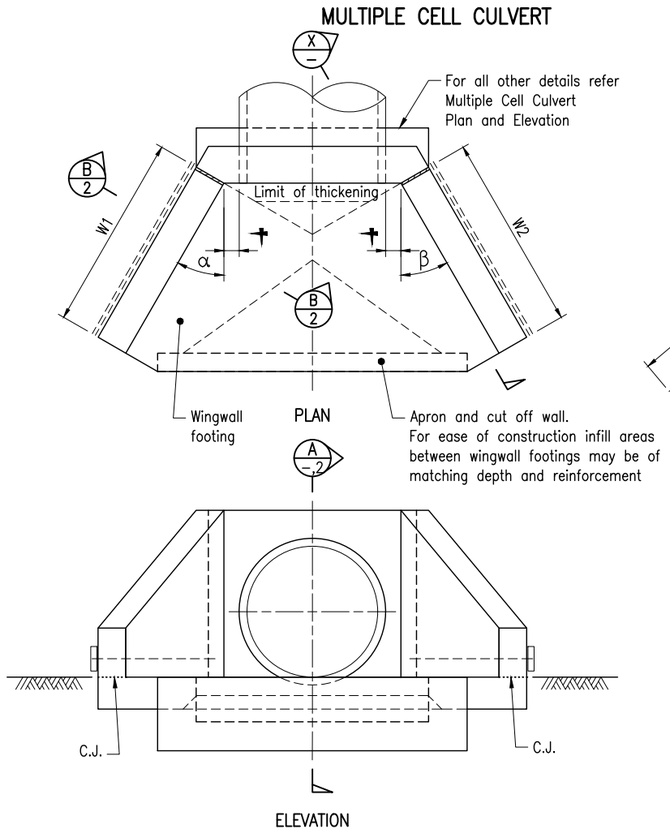

PLAN

ELEVATION

SINGLE CELL CULVERT

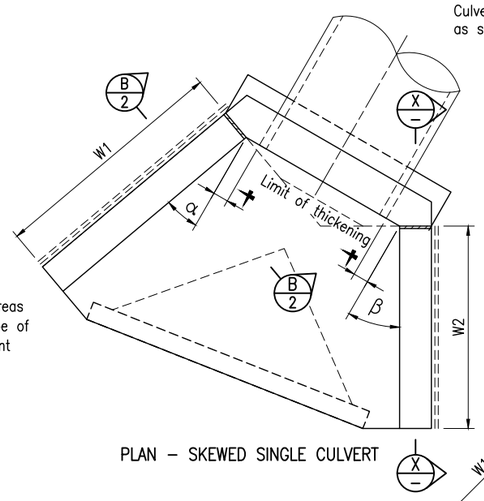

PLAN – SKEWED SINGLE CULVERT

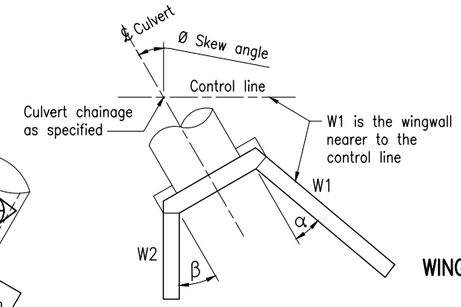

Skew angle Ø	Wingwall angle	
	α	β
0 – 10	30	30
11 – 20	25	30
21 – 30	20	30
31 – 45	15	30

WINGWALL ANGLES

✤ Spacing for multiple pipes "S" is as specified on Standard Drawing 1359.

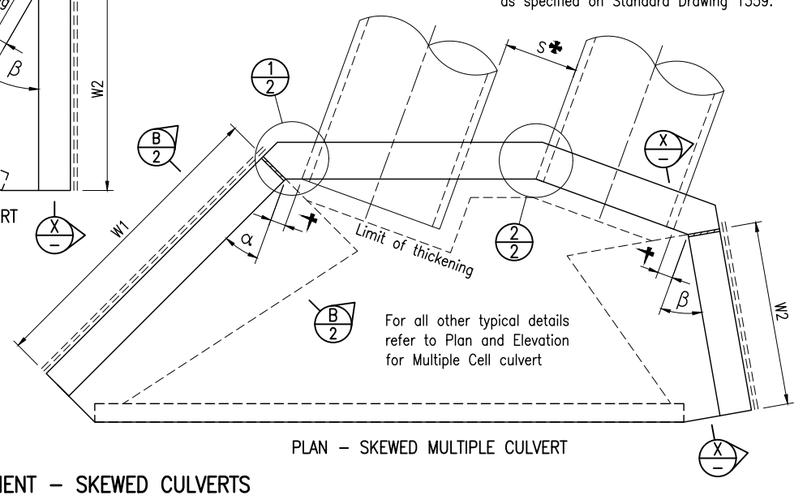

PLAN – SKEWED MULTIPLE CULVERT

GENERAL ARRANGEMENT – SKEWED CULVERTS

Department of Transport and Main Roads

PIPE CULVERTS

WINGWALLS, HEADWALL AND APRON FOR PIPE DIAMETER 750 TO 2400 DRAWING 1 OF 2

Queensland Government

A3 Not to Scale

Standard Drawing No 1304

Date 7/2021

J K L M N O

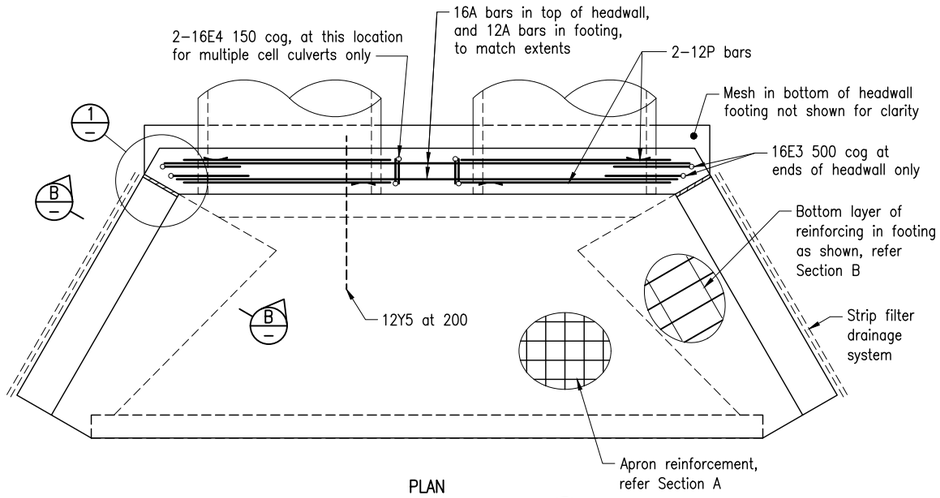

PLAN

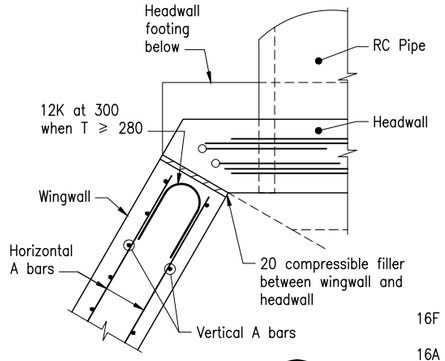

DETAIL 1/–,1

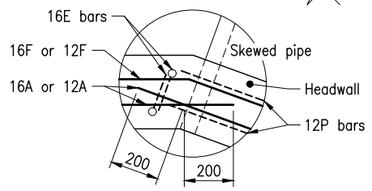

DETAIL 2/–,1

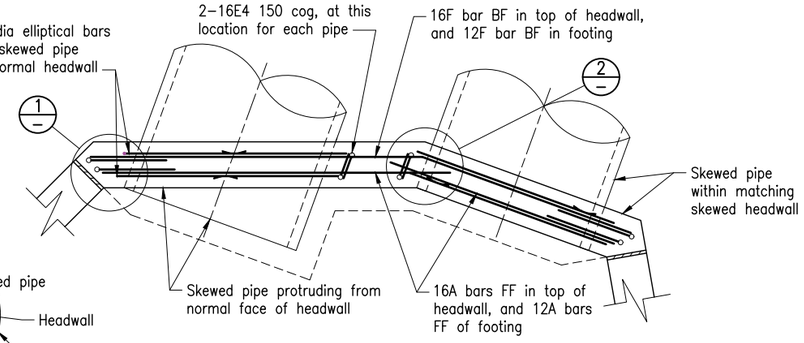

PART PLAN

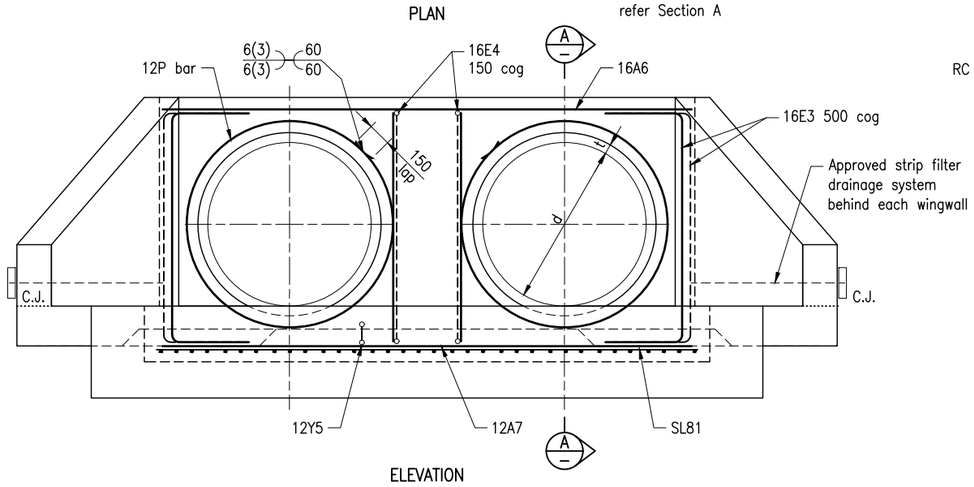

ELEVATION

HEADWALL REINFORCEMENT – SQUARE CULVERT

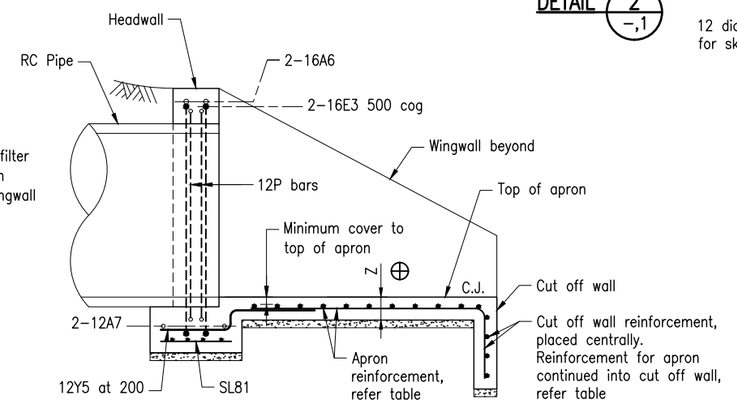

HEADWALL REINFORCEMENT

APRON AND CUT OFF WALL REINFORCEMENT

SECTION A/–,1

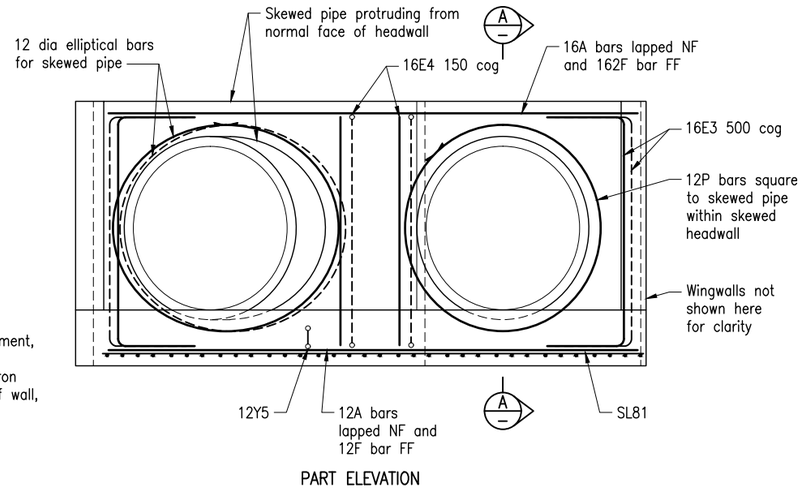

PART ELEVATION

HEADWALL REINFORCEMENT – SKEWED MULTIPLE CULVERT

WINGWALL DIMENSIONS AND MINIMUM REINFORCEMENT REQUIREMENTS

up to Hw †	T ◑ for Exposure classification			Vertical A bars BF		Vertical A bars FF		Horizontal A bars FF and BF						D1 bars	
								B2		C1		C2			
	B2	C1	C2	Dia	Spacing	Dia	Spacing	Dia	Spacing	Dia	Spacing	Dia	Spacing	Dia	Dim A ◆
1000	220	240	260	12	150	12	300	12	150	12	125	12	100	12	500
1500	220	240	260						150		125				
2000	260	270	280						125		100				
2500	330	340	350						100	16	150	16	125		
3000	380	390	400	16				16	150		125			16	700

† where Hw = Internal pipe diameter d + pipe thickness t + headwall thickness nominal 230 above pipes

◆ where type D1 and D2 bars exceed the wall height, curtail the bars to match the wall height, ensuring cover requirements are met

APRON AND CUT OFF WALL THICKNESSES AND MINIMUM REINFORCEMENT REQUIREMENTS

Exposure classification	Apron and Cut off wall #	
	Thickness Z ⊕	Reinforcement
B2	150	N12 at 150 both ways
C1	175	N12 at 150 both ways
C2	190	N12 at 125 both ways

⊕ where Z is a constant thickness for aprons and cut off walls.

Apron minimum reinforcement for shrinkage and temperature effects is designed considering the full restraint condition to AS 5100. For the slab on ground condition, only the top half of the apron thickness is considered for calculation of this reinforcement.

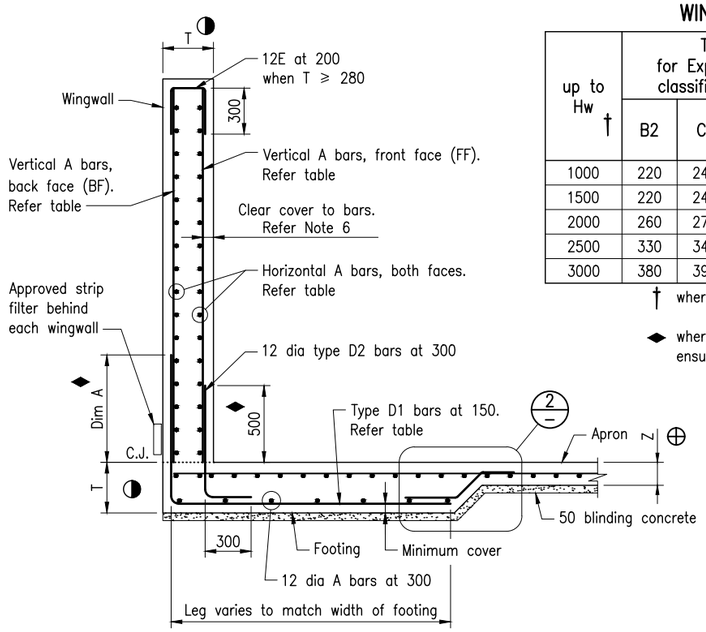

SECTION B/–,1 WINGWALL AND FOOTING REINFORCEMENT DETAILS

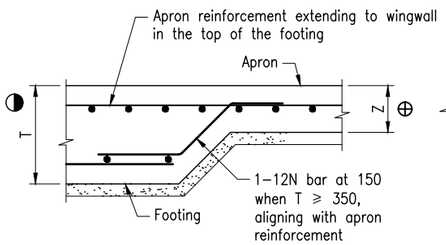

DETAIL 2/–

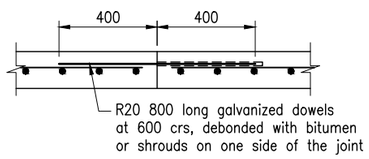

TYPICAL DOWELLED CONTRACTION JOINT

Installed with direction of flow, for aprons larger than 20m. Refer Note 4 on Drawing 1

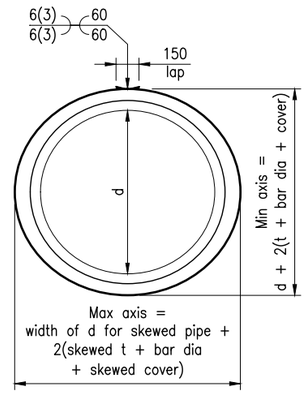

12 DIA ELLIPTICAL BAR DETAIL

Department of Transport and Main Roads

PIPE CULVERTS

WINGWALLS, HEADWALL AND APRON FOR PIPE DIAMETER 750 TO 2400 DRAWING 2 OF 2

Queensland Government

A3 | Not to Scale

Standard Drawing No 1304

Date 7/2021

J | K | L | M | N | O